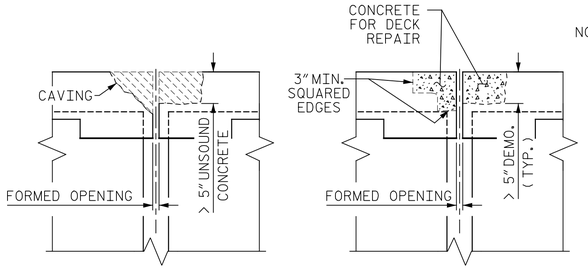

JOINT DEMOLITION FOR CAVING OR UNSOUND CONCRETE

REPAIRED JOINT

NOTE: RETAIN ALL EXISTING REINFORCING STEEL. BARS CUT OR DAMAGED DURING DEMOLITION SHALL BE REPAIRED BY THE CONTRACTOR AT NO COST TO THE DEPARTMENT PRIOR TO PLACING REPAIR CONCRETE OR ELASTOMERIC CONCRETE.

FOR BRIDGE JOINT DEMOLITION EXCAVATE TO SOUND CONCRETE. IF BRIDGE JOINT DEMOLITION EXTENDS MORE THAN 2" BELOW THE BOTTOM OF THE PLANNED ELASTOMERIC CONCRETE HEADER OR IF CAVING OF CONCRETE OCCURS SUCH THAT A LEVEL SURFACE CANNOT BE ACHIEVED, AS SHOWN, APPROVED REPAIR CONCRETE SHALL BE PLACED IN THE EXCAVATED AREA TO THE SURFACE OF THE DECK

DO NOT INSTALL ELASTOMERIC CONCRETE HEADER UNTIL THE REPAIR CONCRETE HAS ACHIEVED DESIGN STRENGTH AND IS FULLY CURED (REFER TO MANUFACTURER SPECIFICATIONS FOR STRENGTH AND CURE).

THE CONTRACTOR SHALL HAVE ON HAND REPAIR CONCRETE AND MIXING EQUIPMENT PRIOR TO BEGINNING BRIDGE JOINT DEMOLITION.

CONCRETE FOR DECK REPAIR DETAIL

(FOR REPAIR OF JOINTS WITH DEEP EXCAVATION OR SLOPING EDGES)

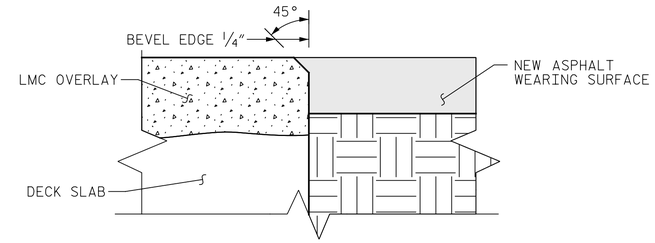

EDGE OF DECK AT APPROACH

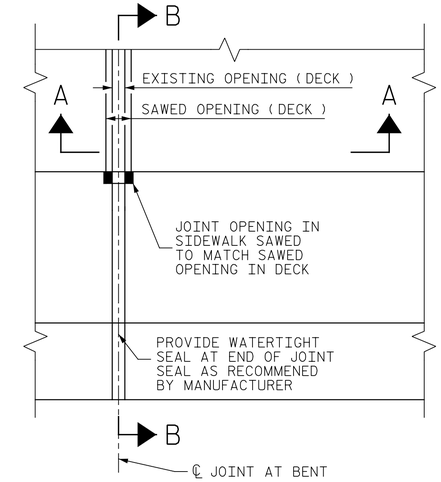

PLAN

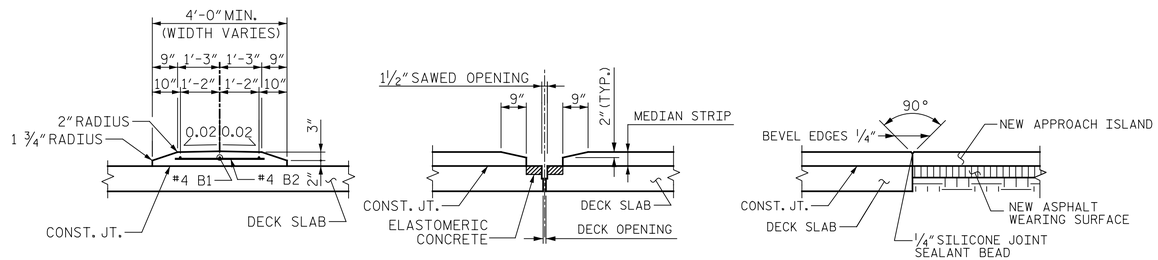

TYPICAL PROPOSED

DETAIL AT SAWED JOINT

DETAIL AT APPROACH

PERMANENT CONCRETE MEDIAN STRIP

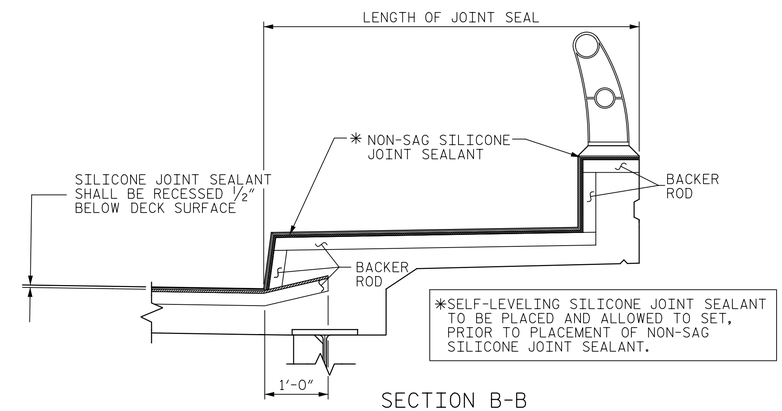

SECTION B-B

JOINT SEAL DETAILS AT SIDEWALK

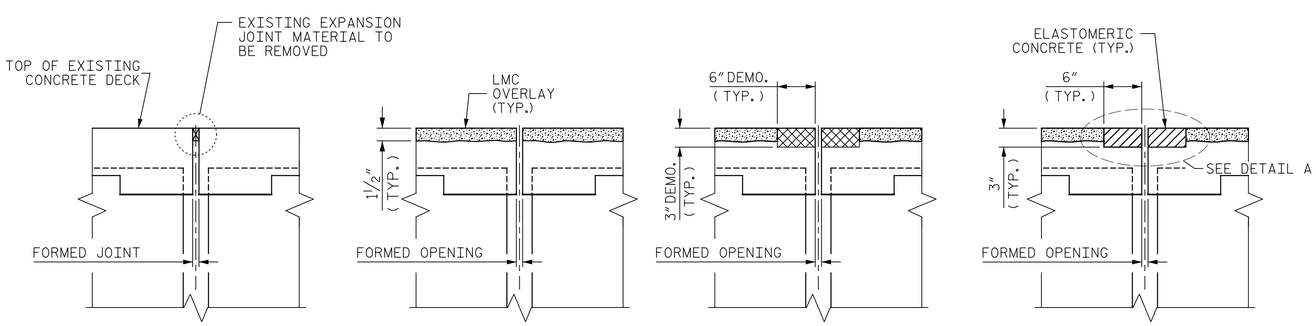

EXISTING

PROPOSED LMC OVERLAY

MINIMUM JOINT DEMOLITION

PROPOSED JOINT PRE-SAWED DIMENSIONS

SECTION A-A

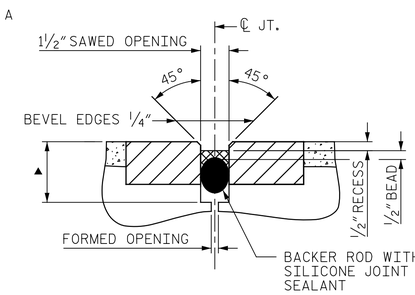

▲ SAW CUT SHALL BE 3/4" BELOW THE BOTTOM OF THE BACKER ROD. SEE MANUFACTURER RECOMMENDATIONS

DETAIL A

(PROPOSED JOINT WITH SAWED DIMENSIONS)

ELASTOMERIC CONCRETE	
SPAN "A"	9.6 CF
SPAN "B"	19.1 CF
SPAN "C"	9.6 CF

HYDRO-DEMOLITION OR EXCAVATION OF CONCRETE AT THE EXISTING JOINT SHALL RESULT IN THE BOTTOM OF THE EXCAVATION BEING REASONABLY FLAT AND LEVEL, TO PROVIDE SUFFICIENT SUBSTRATE FOR PLACEMENT AND SUPPORT OF ELASTOMERIC OR REPAIR CONCRETE. DEMOLISH BRIDGE JOINT TO THE NECESSARY DEPTH, SUCH THAT ELASTOMERIC CONCRETE SHALL BE FOUNDED ON CONCRETE OR REPAIR CONCRETE SUBSTRATE, NOT LATEX MODIFIED CONCRETE

PROJECT NO. 8BPR.10761
RANDOLPH COUNTY
BRIDGE NO. 750197

STATE OF NORTH CAROLINA
DEPARTMENT OF TRANSPORTATION
RALEIGH

JOINT DETAILS

NORTH CAROLINA PROFESSIONAL SEAL 020208 ENGINEER ERIC B. NELSON JR.

DocuSigned by: Eric B Nelson Jr. 5/17/2018
ACB80521197C4CD...

PLANS PREPARED BY:
Gannett Fleming
Excellence Delivered As Promised
2610 Wycliff Road
Suite 102
Raleigh NC 27607-3073
(919) 420-7660
NC Lic. No. F-0270

DOCUMENT NOT CONSIDERED FINAL UNLESS ALL SIGNATURES COMPLETED

REVISIONS							
NO.	BY:	DATE:	NO.	BY:	DATE:	SHEET NO.	S-33
1			3			TOTAL SHEETS	34
2			4				

DRAWN BY : M. SPENCER DATE : 5/2018
CHECKED BY : R. NELSON DATE : 5/2018