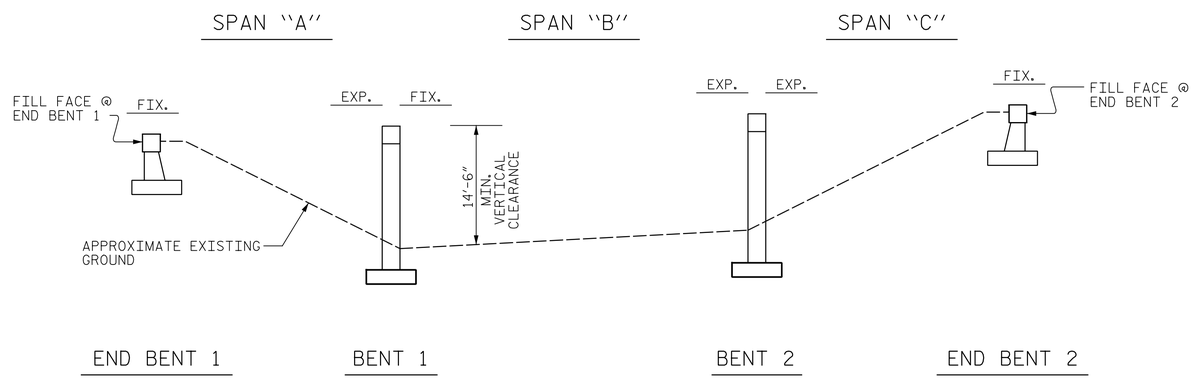

SECTION ALONG ℄ BRIDGE

(SECTION AT BENTS AND END BENTS ARE AT RIGHT ANGLES)

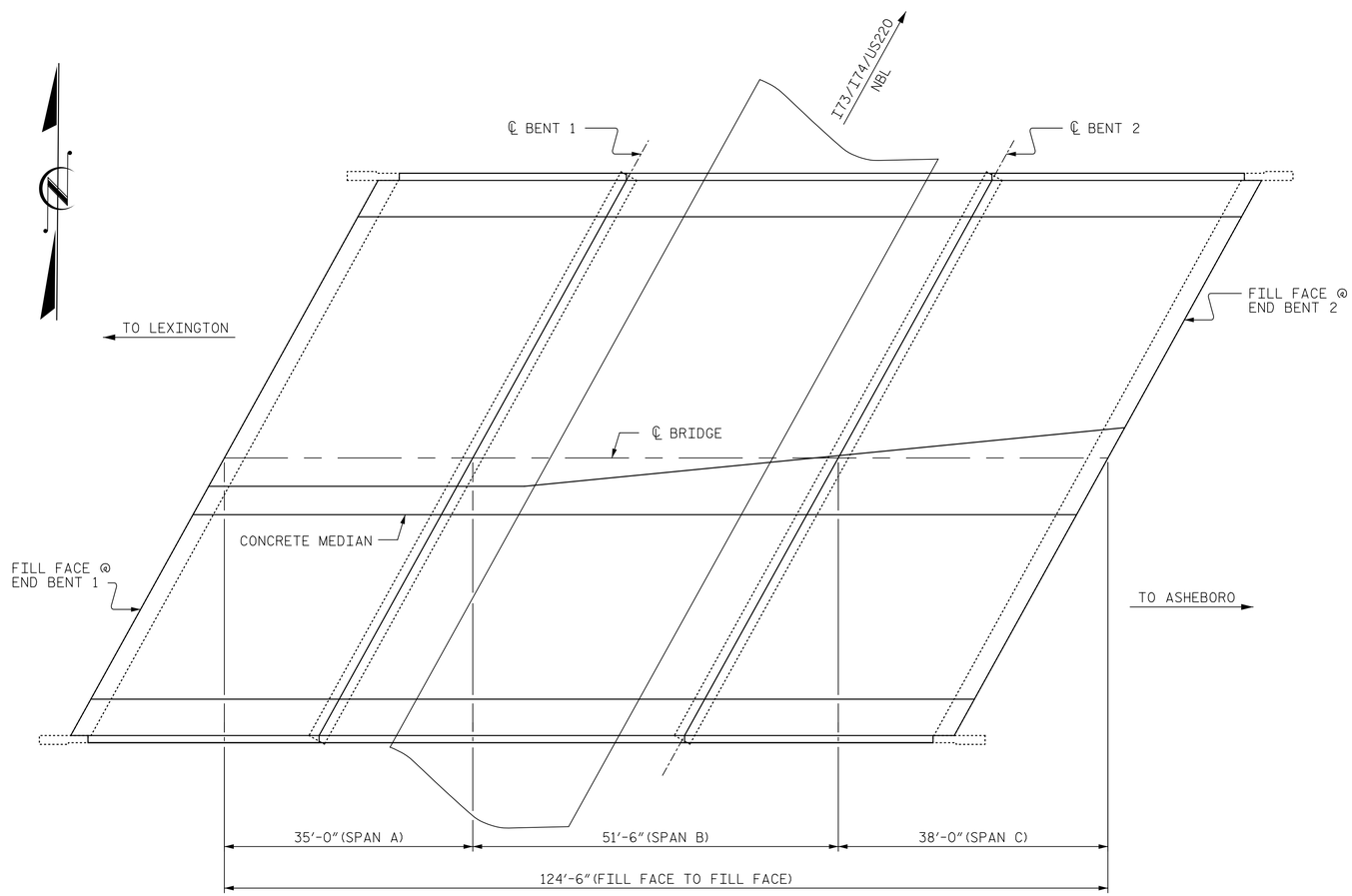

PLAN

(PILES NOT SHOWN FOR CLARITY)

NOTE:

PROFILE INFORMATION IS TAKEN FROM THE ORIGINAL PLANS AND THE ROUTINE INSPECTION REPORT DATED 3/8/2017.

BRIDGE ORIENTATION CONFORMS TO THE ROUTINE INSPECTION REPORT.

SCOPE OF WORK

- BRIDGE DECK OVERLAY WITH LATEX MODIFIED CONCRETE (LMC)
- REPLACEMENT OF EXISTING BRIDGE DECK JOINTS
- REMOVE & REPLACE BRIDGE DECK ISLAND

CONSTRUCTION SEQUENCE

1.) PERFORM ROADWAY APPROACH MILLING AND BRIDGE DECK SURFACE PREPARATON AND PLACE LMC OVERLAY.

2.) REPLACE BRIDGE DECK ISLAND.

3.) PERFORM ASPHALT RESURFACING TO TIE APPROACHES TO BRIDGE DECK.

4.) INSTALL ELASTOMERIC CONCRETE AND SILICONE JOINTS AT BENTS.

5.) GROOVE LMC.

I HEREBY CERTIFY THAT THIS STRUCTURE WAS REHABILITATED ACCORDING TO THESE PLANS OR AS NOTED HEREIN.

RESIDENT ENGINEER DATE

PROJECT NO. 8BPR.10761
RANDOLPH COUNTY
BRIDGE NO. 750017

NORTH CAROLINA PROFESSIONAL SEAL 020208 ENGINEER ERIC B. NELSON JR.

DocuSigned by: Eric B. Nelson Jr. 5/9/2018
AC88082119D74CD...

STATE OF NORTH CAROLINA
DEPARTMENT OF TRANSPORTATION
RALEIGH

GENERAL DRAWING
BRIDGE #17 ON NC42
OVER I73/I74/US220 NBL

REVISIONS						SHEET NO.
NO.	BY:	DATE:	NO.	BY:	DATE:	S-2
1			3			TOTAL SHEETS
2			4			34

DOCUMENT NOT CONSIDERED FINAL UNLESS ALL SIGNATURES COMPLETED

PLANS PREPARED BY:
Gannett Fleming
Excellence Delivered As Promised
2610 Wycliff Road
Suite 102
Raleigh NC 27607-3073
(919) 420-7660
NC Lic. No. F-0270

DRAWN BY : M. SPENCER DATE : 5/2018
CHECKED BY : R. NELSON DATE : 5/2018