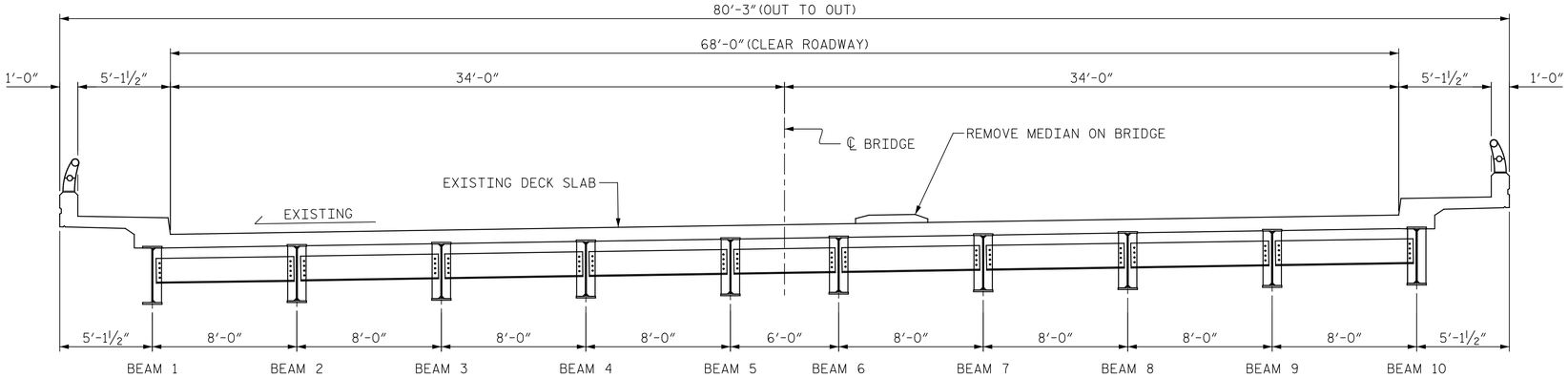

TYPICAL SECTION
(EXISTING)

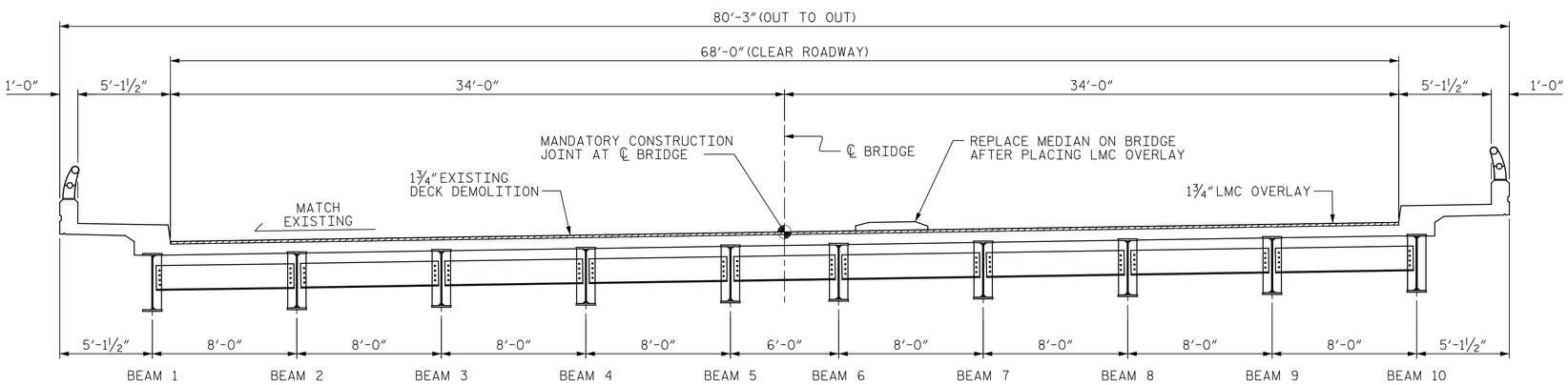

TYPICAL SECTION
(PROPOSED)

NOTE:

SEE TRANSPORTATION MANAGEMENT PLANS FOR LANE WIDTHS, SEQUENCING AND OTHER TRAFFIC CONTROL MEASURES FOR STAGING OF OVERLAY SURFACE PREPARATION AND LMC PLACEMENT.

WHEN PREPARING THE SURFACE FOR AN LMC OVERLAY ADJACENT TO A PREVIOUSLY PLACED LMC STAGE, THE PREVIOUSLY PLACED LMC SHALL BE REMOVED FOR A DISTANCE OF 4 INCHES FROM THE EDGE OF THE LMC. THE SURFACE OF THE NEW STAGE AREA, ALONG WITH THE 4 INCH OVERLAY AREA, SHALL BE PREPARED AS PER THE OVERLAY SURFACE PREPARATION SPECIAL PROVISION. NEW LMC SHALL BE PLACED IN THE 4 INCH OVERLAP AS PART OF THE NEW LMC STAGE PLACEMENT.

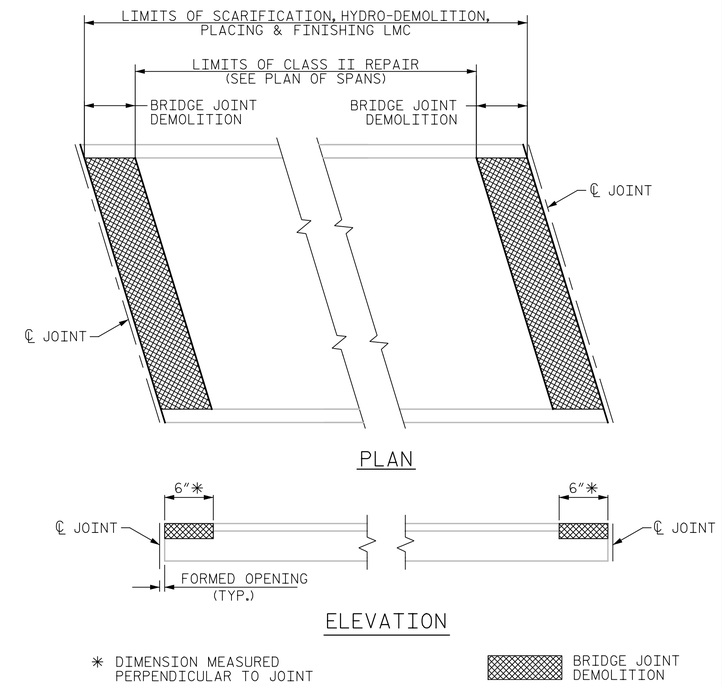

PAY LIMITS FOR OVERLAY BID ITEMS

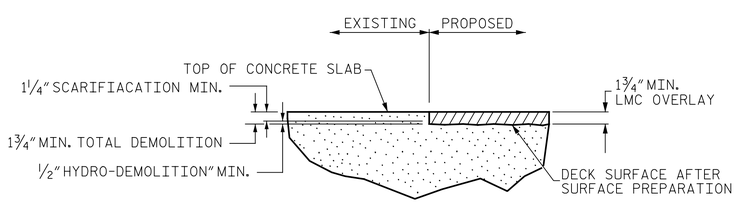

DETAIL FOR LMC OVERLAY

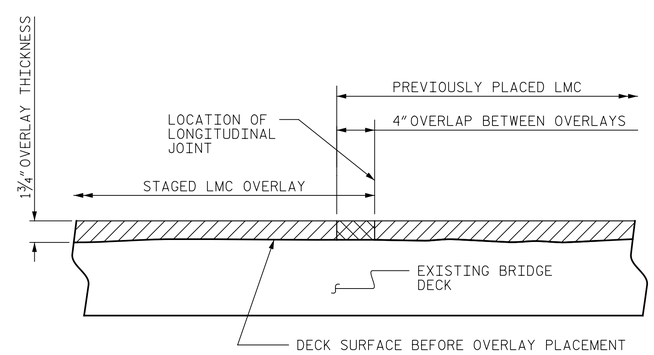

STAGED LMC OVERLAY CONSTRUCTION JOINT

PROJECT NO. 8BPR.10761
RANDOLPH COUNTY
BRIDGE NO. 750196

STATE OF NORTH CAROLINA
DEPARTMENT OF TRANSPORTATION
RALEIGH

TYPICAL SECTION & OVERLAY DETAILS

NORTH CAROLINA PROFESSIONAL SEAL 020208 ENGINEER ERIC B. NELSON JR.

DocuSigned by: Eric B. Nelson Jr. 5/17/2018
ACB80821190742CD...

PLANS PREPARED BY:
Gannett Fleming
Excellence Delivered As Promised
2610 Wycliff Road
Suite 102
Raleigh NC 27607-3073
(919) 420-7660
NC Lic. No. F-0270

DOCUMENT NOT CONSIDERED FINAL UNLESS ALL SIGNATURES COMPLETED

REVISIONS						
NO.	BY:	DATE:	NO.	BY:	DATE:	
1			3			
2			4			

SHEET NO. S-21
TOTAL SHEETS 34

DRAWN BY : M. SPENCER DATE : 5/2018
CHECKED BY : R. NELSON DATE : 5/2018