PAVEMENT SCHEDULE	
C1	PROP. VAR. DEPTH ASPHALT CONCRETE SURFACE COURSE, TYPE S9.5C, AT AN AVERAGE RATE OF 112 LBS. PER SQ. YD. PER 1" DEPTH. TO BE PLACED IN LAYERS NOT TO EXCEED 1½" IN DEPTH.
R1	5" MONOLITHIC CONCRETE ISLAND
U	EXISTING PAVEMENT
Z	INCIDENTAL MILLING

SUMMARY OF QUANTITIES		
	ESTIMATE	ACTUAL
INCIDENTAL MILLING	1187 SQ. YDS.	
ASPHALT CONCRETE SURFACE COURSE, TYPE S9.5C	99.7 TONS	
ASPHALT BINDER FOR PLANT MIX	6.0 TONS	
5" CONCRETE MONOLITHIC KEYED-IN ISLAND	253 SY	
INDUCTIVE LOOP SAWCUT	200 LF	

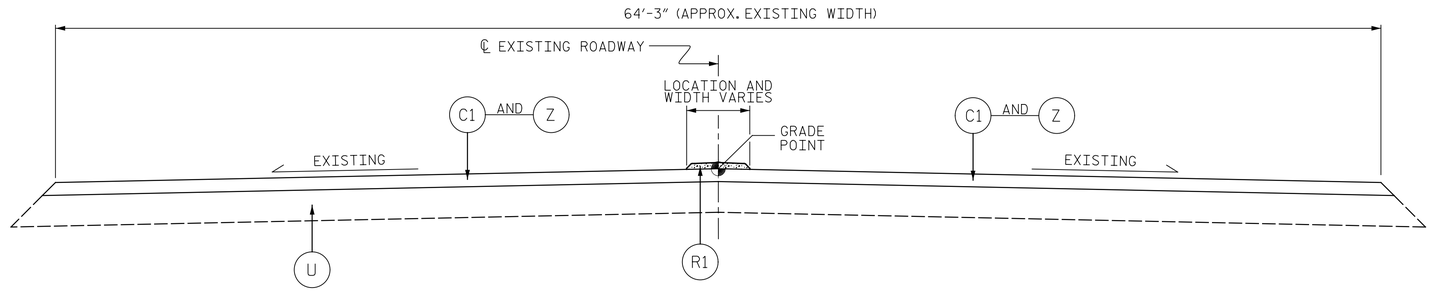

TYPICAL PROPOSED ROADWAY SECTION

NOTES:

INCIDENTAL MILLING - EXISTING APPROACH ASPHALT PAVEMENT TO BE MILLED AS NECESSARY TO ATTAIN MINIMUM 1½" DEPTH OF NEW ASPHALT PAVEMENT. PROVIDE NEW ASPHALT PAVING THICKNESS TO CREATE A SMOOTH TRANSITION TO THE APPROACH SLABS, AS SHOWN. NEW ASPHALT PAVING THICKNESS MAY EXCEED 1½" DUE TO SETTLEMENT OF THE EXISTING APPROACH ASPHALT PAVEMENT.

PROVIDE OPENINGS IN ISLAND FOR SIGN RE-INSTALLATION

SEE NCDOT STANDARD DRAWING 904.50 FOR SIGN INSTALLATION

SIGN INSTALLATION IS CONSIDERED INCIDENTAL TO OTHER WORK ITEMS

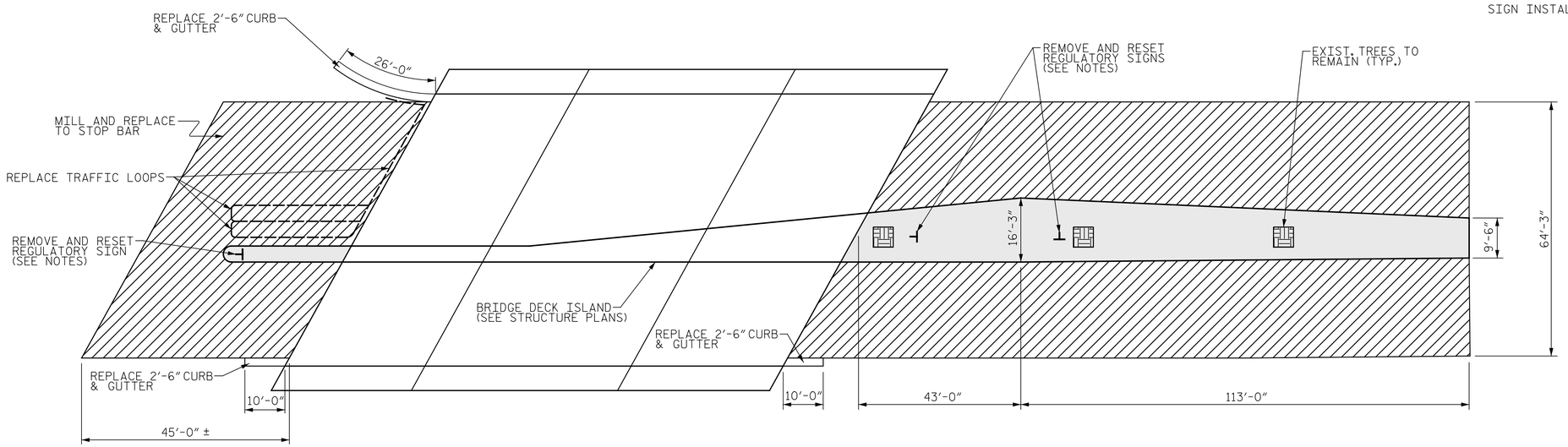

INCIDENTAL MILLING

5" CONC. MONOLITHIC KEYED-IN ISLAND

PLAN

PROJECT NO. 8BPR.10761

RANDOLPH COUNTY

BRIDGE NO. 750017

NORTH CAROLINA PROFESSIONAL SEAL 020208 ENGINEER ERIC B. NELSON JR.

DocuSigned by: Eric B. Nelson Jr. 5/15/2018
ACB808211907 4CD...

STATE OF NORTH CAROLINA
DEPARTMENT OF TRANSPORTATION
RALEIGH

APPROACH MILLING AND TYPICAL ROADWAY SECTIONS

REVISIONS							SHEET NO.
NO.	BY:	DATE:	NO.	BY:	DATE:		S-9
1			3				TOTAL SHEETS
2			4				34

DOCUMENT NOT CONSIDERED FINAL UNLESS ALL SIGNATURES COMPLETED

PLANS PREPARED BY:
Gannett Fleming
Excellence Delivered As Promised
2610 Wycliff Road
Suite 102
Raleigh NC 27607-3073
(919) 420-7660
NC Lic. No. F-0270

DRAWN BY : B. WHITE DATE : 5/2018
CHECKED BY : R. NELSON DATE : 5/2018